MINDIV

DIV
BETONSKI PRAGOVI

RAILWAY

EQUIPMENT CATALOG

RAILWAY INFRASTRUCTURE
ACCESSORIES

PRESTRESSED
CONCRETE SLEEPERS

STEEL
SLEEPERS

MEMBERS OF **DIV GROUP**

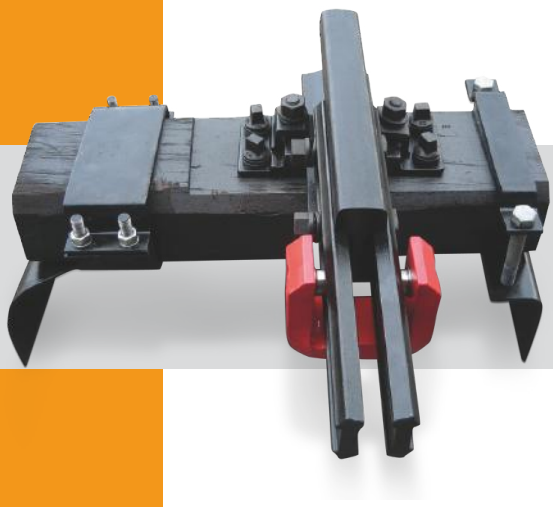

Contents

DIV Group 4
Factory Production program 5

1. RAILWAY FASTENERS - SCREWS I SCHIENENBEFESTIGUNG - SCHRAUBEN
1.1 Sleeper screws I Schwellenschrauben
1.1.A Sleeper screw Ss8, Ss25 and Ss35 I Schwellenschraube Ss8, Ss25 und Ss35 8
1.1.B Sleeper screw with trapeziodal thread and variable thread core I Schwellenschraube mit Trapezoidahlen Gewinde und Variablen Gewinde 9
1.2 T bolts I Hackenschrauben
1.2.A T bolt I Hackenschrauben 10
1.2.B T-bolt HS-40W I Hakenschraube HS-40W 11
1.3 Fishplate bolts I Laschenschrauben
1.3.A Fishplate bolts DIN 5903 I Laschenschrauben DIN 5903 12
1.3.B Fishplate bolts DIN 21547 and DIN 5906 I Laschenschrauben DIN 21547 und DIN 5906 13

2. RAIL SPIKE I SCHIENENNAGEL
2.1. Rail spike I Schienennagel
2.1.A Rail spike I Schienennagel 16
2.1.B Rail spikes with "Dog-head" type 1 I Schienennageln "Dog-head" Typ 1 17
2.1.C Rail spikes with "Dog-head" type 2 I Schienennageln "Dog-head" Typ 2 18
2.1.D Rail spikes with "T-head" I Schienennageln "T-head" 19

3. RAILWAY FASTENERS - MILLED PROFILES I SCHIENENBEFESTIGUNG - GEWALTZTE PROFILE
3.1 Ribbed base plates I Rippenplatten
3.1.A Base plate for rail 49E1 for wooden sleepers I Rippenplatte für Schiene 49E1 auf Holzschwellen 22
3.1.B Base plate for rail 49E1 for concrete sleepers I Rippenplatte für Schiene 49E1 auf Betonschwellen 23
3.1.C Base plate for rail 60E1 for wooden sleepers I Rippenplatte für Schiene 60E1 auf Holzschwellen 24
3.1.D Base plate for rail 60E1 for concrete sleepers I Rippenplatte für Schiene 60E1 auf Betonschwellen 25
3.2 Fishplates I Laschen
3.2.A Fishplate for rail 49E1 I Lasche für Schiene 49E1 26
3.2.B Fishplate for rail 60E1 I Lasche für Schiene 60E1 27
3.3 K-clamps I Klemmplatten
3.3.A Clamp plate for rail 49E1 I Klemmplatte für Schiene 49E1 28
3.3.B Clamp plate for rail 60E1 I Klemmplatte für Schiene 60E1 29

4. RAILWAY SAFETY CAPS AND ANTI SLIDE UTENSIL TYPE MATHEE I SICHERUNGSKAPPEN UND WANDERSCHUTZKLEMMEN PROFILE
4.1 Railway safety capsI Sicherungskappen
4.1.A Rail track safety cap Sik-1a I Sicherungskappe Sik-1a 32
4.1.B Rail track safety cap Sik-3 I Sicherungskappe Sik-3 33
4.1.C Rail track safety cap Sik-5 I Sicherungskappe Sik-5 34
4.1.D Rail track safety cap Sik-6 I Sicherungskappe Sik-6 35
4.1.E Rail track safety cap Sik-7 I Sicherungskappe Sik-7 36
4.1.F Rail track safety cap Sik-10, 20 and 30 I Sicherungskappe Sik -10, 20 und 30 37
4.1.G Rail track safety cap for wooden sleepers I Sicherungskappe für Holzschwelle 38
4.1.H Rail track safety cap for concrete sleepers I Sicherungskappe für Betonschwellen 39
4.2 Anti slide utensil type MathéeI Wanderschutzklemme Typ Mathée
4.2.A Anti slide utensil type Mathée for rail 49E1 I Wanderschutzklemme Typ Mathée für Schiene 49E1 40
4.2.B Anti slide utensil type Mathée for rail 60E1 I Wanderschutzklemme Typ Mathée für Schiene 60E1 41

5. ELASTIC FASTENERS I ELASTISCHE SCHIENENBEFESTIGUNG
5.1 SKL1 Clamps I Spanklemme SKL1
5.1. Clamp SKL1 I Spanklemme SKL1 44
5.2 SKL2 Clamps I Spanklemme SKL2
5.2. Clamp SKL2 I Spanklemme SKL2 45
5.3 SKL14 Clamps I Spanklemme SKL14
5.3. Clamp SKL14 I Spanklemme SKL14 46
5.4 SKL MD Clamps I Spanklemme SKL MD
5.4. Clamp SKL MD I Spanklemme SKL MD 47
5.5 Spring washers I Hochspannende Federringe
5.5. Spring washers I Hochspannende Federringe 47

6. SLEEPERS I SCHWELLEN
6.1. Concrete sleeper B-70 I Betonschwelle B-70 50
6.2. Steel sleeper 50

DIV GROUP

DIV group is already established group on European rail markets while increasingly branching out into the dynamically growing Asian, US, South America and Russia also as leader on domestic market and region.

Since we are familiar with the global trends on different markets and with varying regional requirements we can offer dedicated production site with with following production program.

Production takes place on some of the following equipment:

- Automatic technological lines for forging-stamping of sleeperscrews and bolts (the type of Polymaster PM-250 which produces about 45 piecesImin);
- Automatic technological lines for forging - pressing the nuts and small forgings (the type of Forgemaster GF-35 which produces about 60-90 piecesImin;
- Induction heating equipment at all automatic lines and machines of universal forging (the type of Elomath);
- Automatic technological lines for nut forging (the type of MW-48 which operates 150 pcsImin.)
- A large number of semi-automatic and automatic special machines for finishing and final operation on the product after forging
- Line for hot-dip galvanizing of steel products
- Line for electrolytic galvanizing.

FACTORY PRODUCTION program

Manufacturing

- Railway track fastenings
- Bolts and nuts by the hot forging process
- Railway stock components
- Lightweight railway machinery
- Steel products of various purpose
- Railway concrete sleepers
- Steel sleepers

Services

- Hot-dip zinc galvanizing
- Electrolytic zinc galvanizing

Most significant products

- Sleeper screws
- “T” bolts
- Nuts
- Standard bolts
- Baseplates and fishplates
- Railway stock components
- Lightweight railway machinery

Also in our offer

production of concrete sleepers at our plant in Serbia. Factory is situated at the location of our existing industrial circle MIN DIV ad (daughter company) and extends to more than 20.000 square meters of manufacturing and handling space with a capacity of 500.000 spleepers per year.
By opening this factory we are strengthening the overall product range and capacity of DIV group.
Besides concrete sleepers we offer molds for concrete sleepers, and also steel sleepers.

1

RAILWAY FASTENERS - SCREWS
SCHIENENBEFESTIGUNG - SCHRAUBEN

1.1 Sleeper screws
Schwellenschrauben

1.2 T bolts
Hackenschrauben

1.3 Fishplate bolts
Laschenschrauben

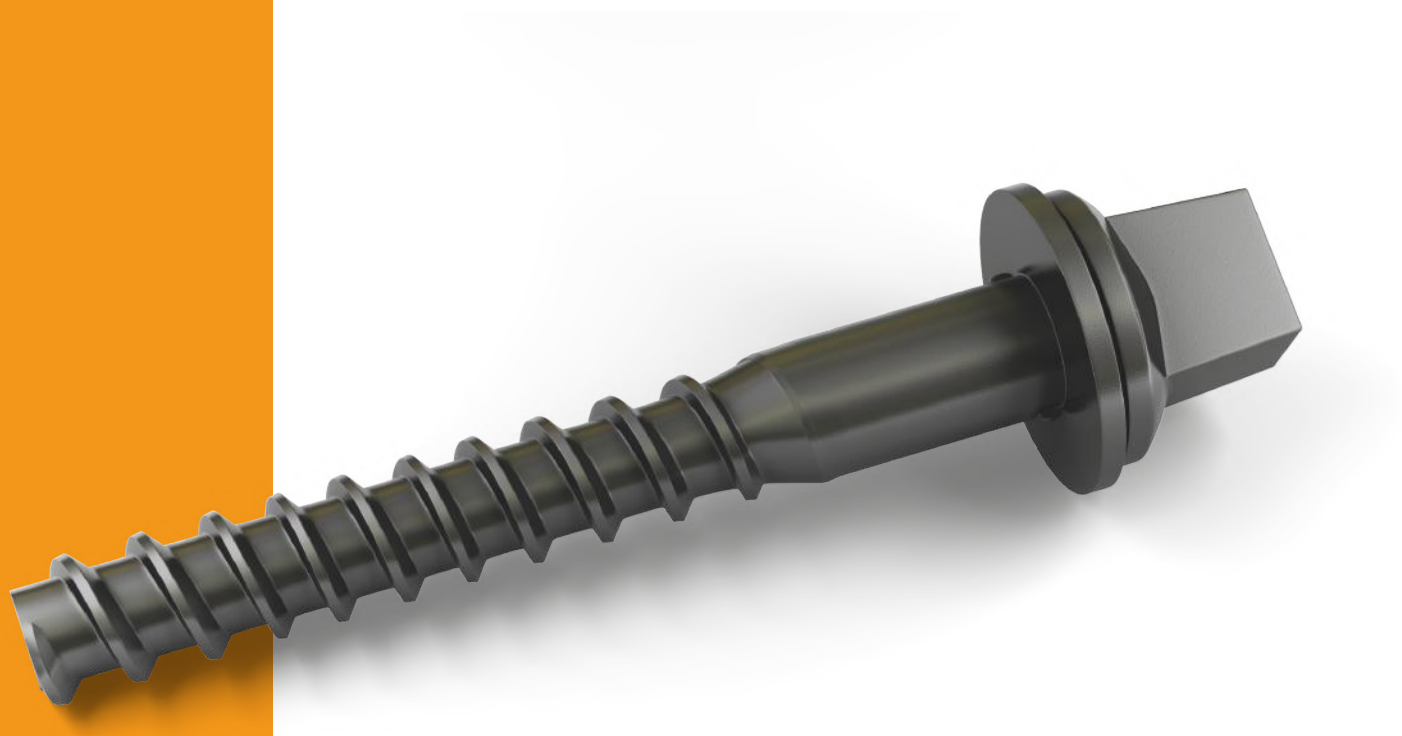

Sleeper screws I Schwellenschrauben

1.1.A Sleeper screw Ss8, Ss25 and Ss35

Schwellenschraube Ss8, Ss25 und Ss35

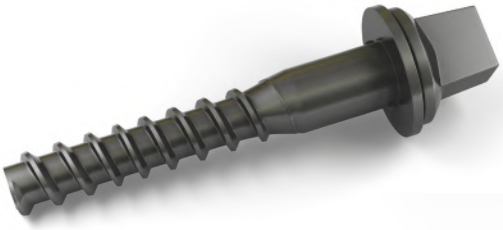

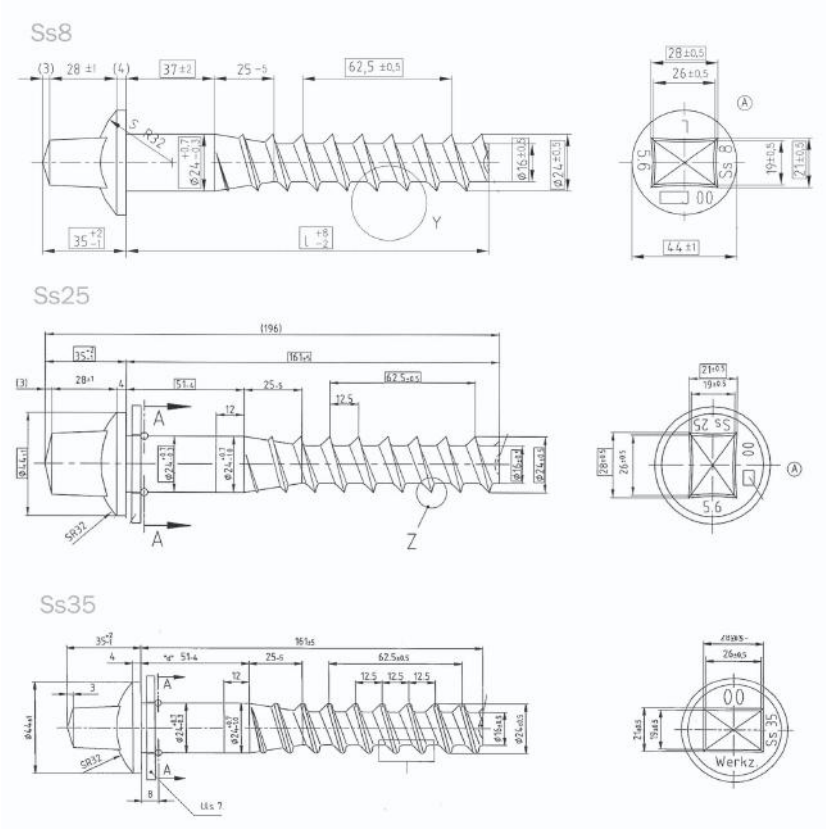

1. RAILWAY FASTENERS - SCREWS
SCHIENENBEFESTIGUNG - SCHRAUBEN

Sleeper screws I Schwellenschrauben

1.1.B Sleeper screw with trapeziodal thread and variable thread core
Schwellenschraube mit Trapezoidahlen Gewinde und Variablen Gewinde

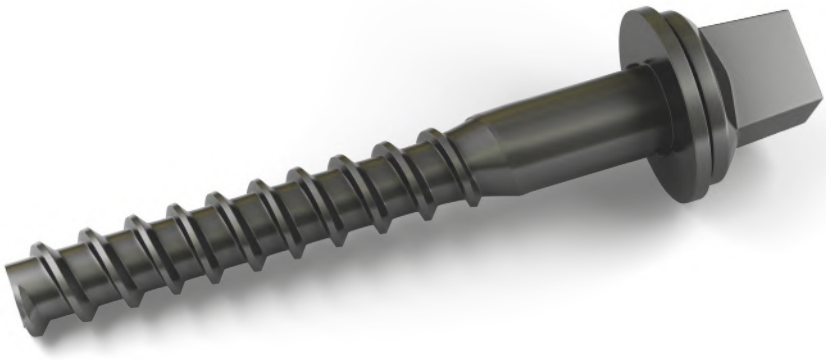

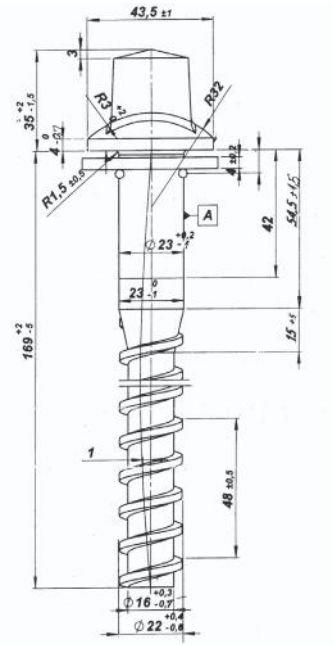

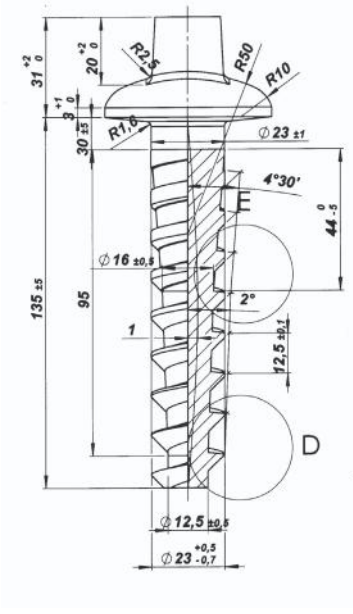

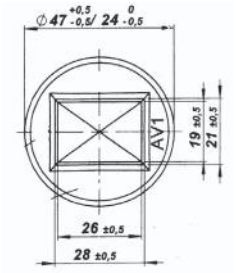

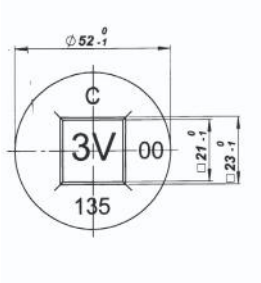

T bolts I Hackenschrauben

1.2.A T bolt

Hackenschrauben

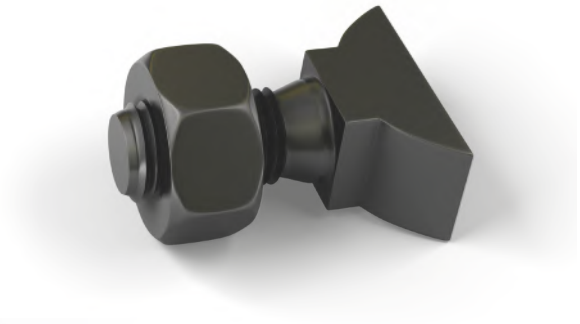

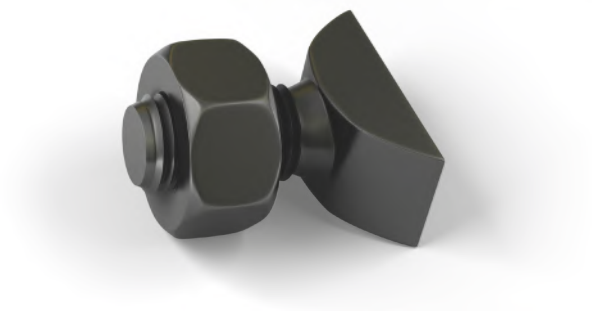

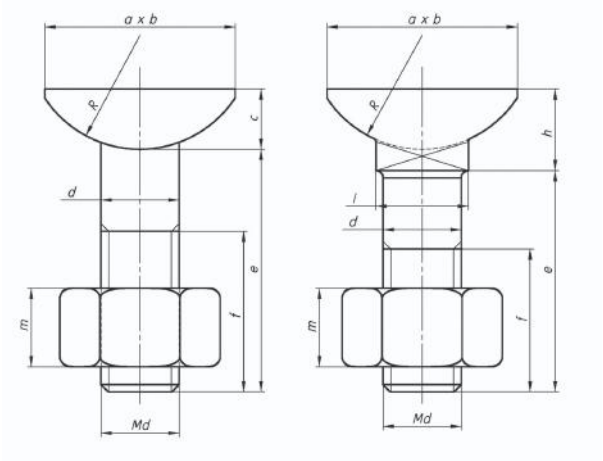

BOLT											NUT	
Name	Mark	axb	R	c	d	e	f	Md	h	i	Sw	m
-	22x65	48x22	32	16	20	65	45	20	19,5	25,5	35	25
-	22x68	53,5x27	32	17	22	68	45	22	-	-	39	22
-	22x75	53,5x24	32	18	22	75	55	22	-	-	39	26
-	22x72	53,5x24	32	18	22	72	55	22	-	-	39	26
-	22x65	53,5x24	32	18	22	65	45	22	-	-	39	26
Hs26I65	22x65	53,5x27	32	17	22	65	50	22	-	-	39	22
Hs26I55	22x55	53,5x27	32	17	22	55	45	22	-	-	39	22
Hs32I55	22x55	53,5x27	32	17	22	55	40	22	23	26	39	22
Hs32I48	22x48	53,5x27	32	17	22	48	33	22	23	26	39	22
Hs32I65	22x65	53,5x27	32	17	22	65	45	22	23	26	39	22
-	27x57	54x32	32	18	27	57	40	27	-	-	41	22
-	33x83,5	61x33	32	26,6	33	83,5	45	33	-		50	26

1. RAILWAY FASTENERS - SCREWS
SCHIENENBEFESTIGUNG - SCHRAUBEN

T bolts I Hackenschrauben

1.2.B T-bolt HS-40W

Hakenschraube HS-40W

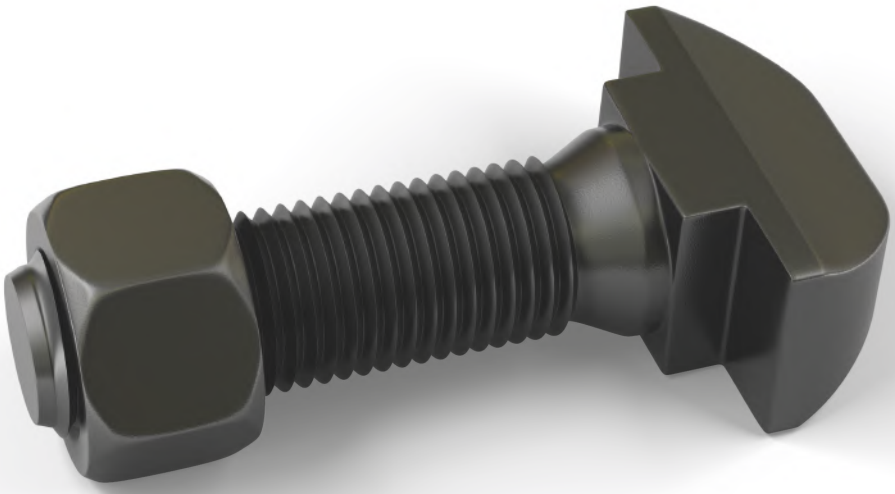

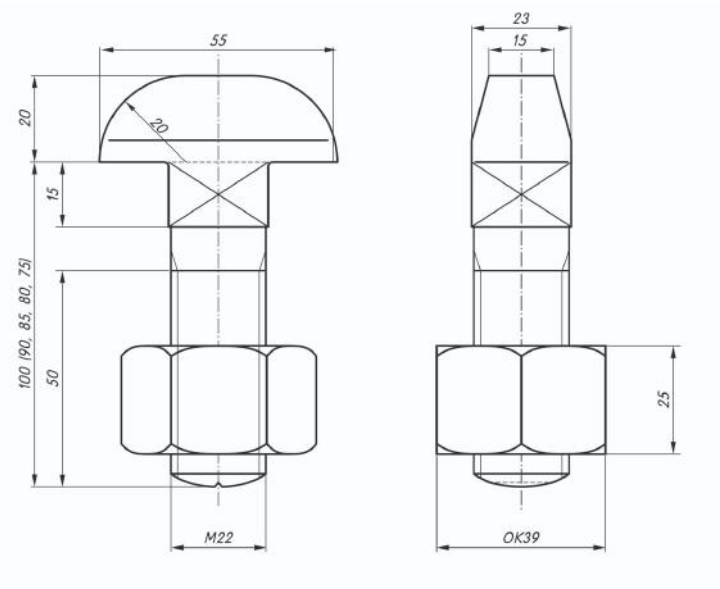

Fishplate bolts | Laschenschrauben

1.3.A Fishplate bolts DIN 5903

Laschenschrauben DIN 5903

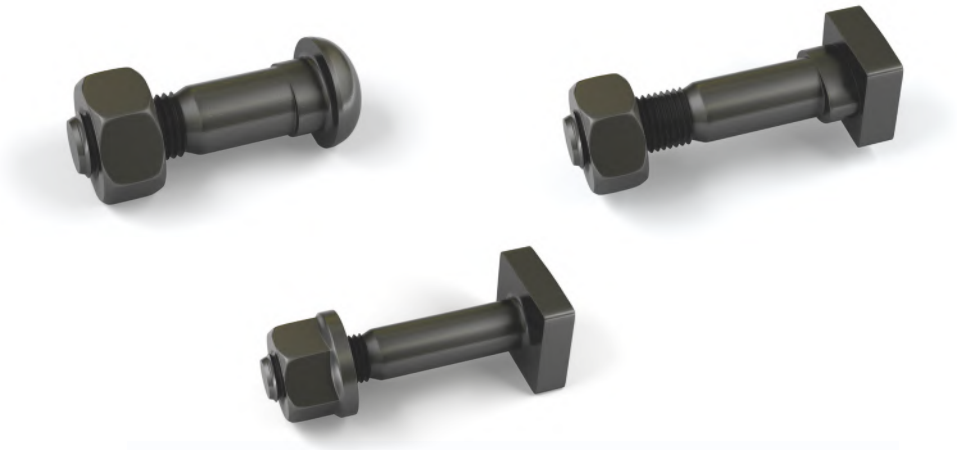

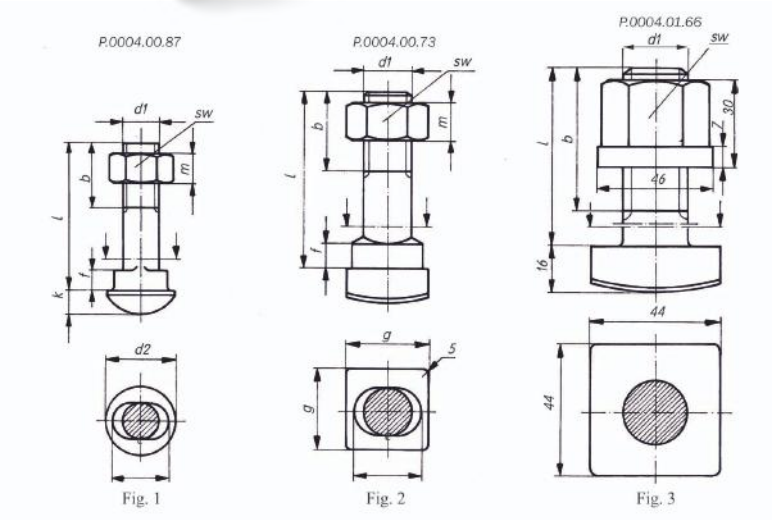

d_1	l	Fig.	b	c	d_2	f	k	g	m	sw	Rail	kgl100
M10	40	1	19	14	19	5	6		8	17	S7	41
M12	50	1	21	18	24	7	8		10	19	S10, S12	80
	55										S14	83
M16	60	1	27	22	30	8	10		13	24	S12, S18	160
	65	2	27	22		8	12	27	13	24		167
M20	90	2	46	30		15	14	32	20	32	S24	423
	100		49								S30, S34	446
M22	105	2	49	33		17	16	39	22	39	S33	667
	110	3	55							39		770
	115	2	49	33		17	16	39	22	39		696
	120	3	55							39	S33, S41	800
M24	120	3	55								S41	847
	125										S49	864
	130										S49	882
	140										S49, S54	916
M27	150	3	55								S49, S54	1016

1. RAILWAY FASTENERS - SCREWS
SCHIENENBEFESTIGUNG - SCHRAUBEN

Fishplate bolts I Laschenschrauben

1.3.B Fishplate bolts DIN 21547 and DIN 5906
Laschenschrauben DIN 21547 und DIN 5906

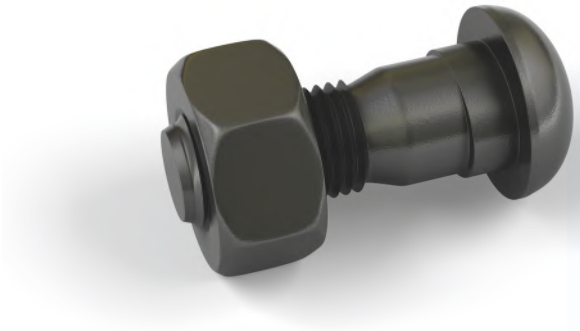

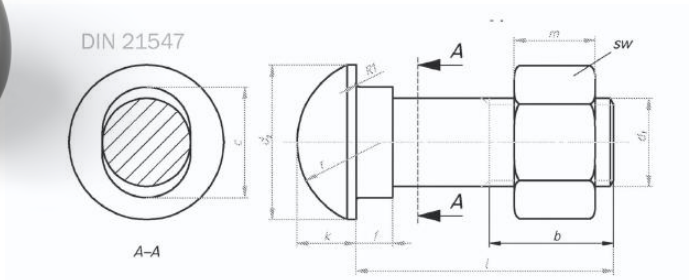

d_1	l	b	C	d_2	f	k	r	m	sw	profile
M20	70	45	28	38	8	12,5	21	16	30	G1.130
M24	70	40	30	42	10	16	23	19	36	G1.140

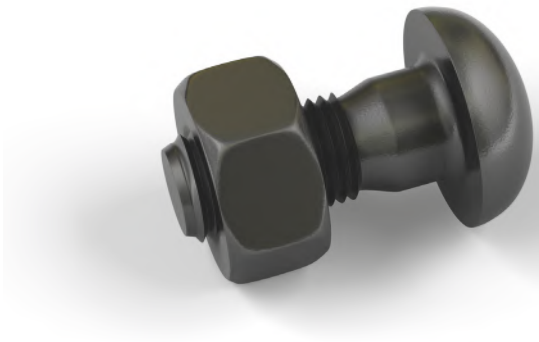

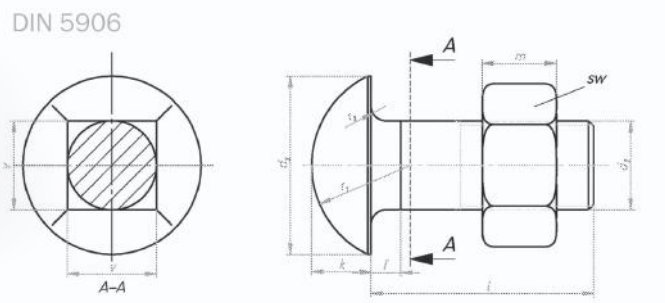

d_2	l_2	b	d_3	f	k	r_1	r_2	v	NUT		kg/1000 pcs.	profile
									m	sw		
M10	25	16	19	3	6	10,5	0,5	10	8	18	34	37
M12	30	18	24	4	8	13,3	0,5	12	10	19	59	41
M16	35	20	30	5	10	16,2	1	16	13	24	118	46

2

RAIL SPIKE
SCHIENENNAGEL

2.1 Rail spike
Schienennagel

2.2 Rail spikes with "Dog-head" type 1
Schienennageln "Dog-head" Typ 1

2.3 Rail spikes with "Dog-head" type 2
Schienennageln "Dog-head" Typ 2

2.4 Rail spikes with "T-head"
Schienennageln "T-head"

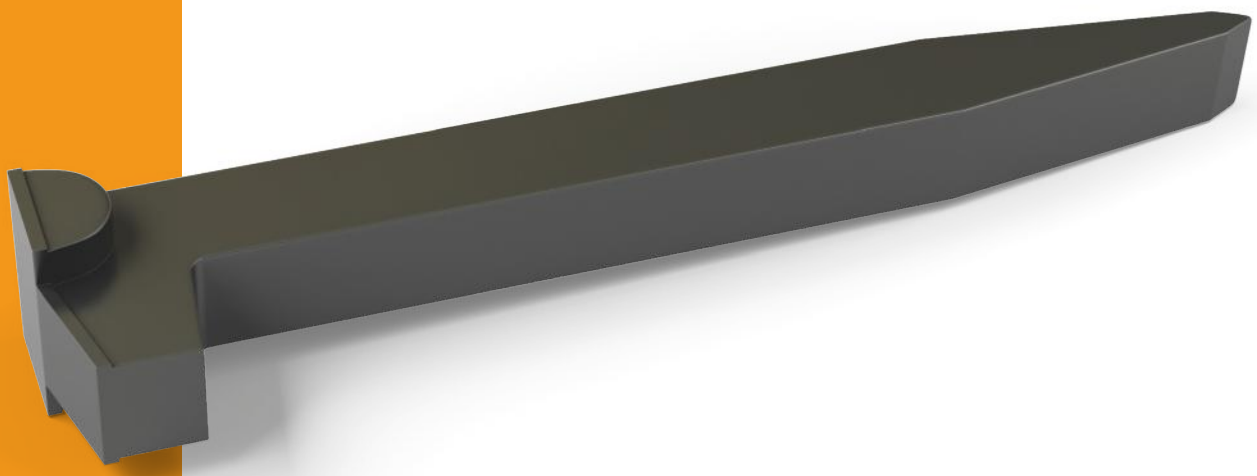

2. RAIL SPIKE
SCHIENENNAGEL

Rail spike I Schienennagel

2.1.A Rail spike
Schienennagel

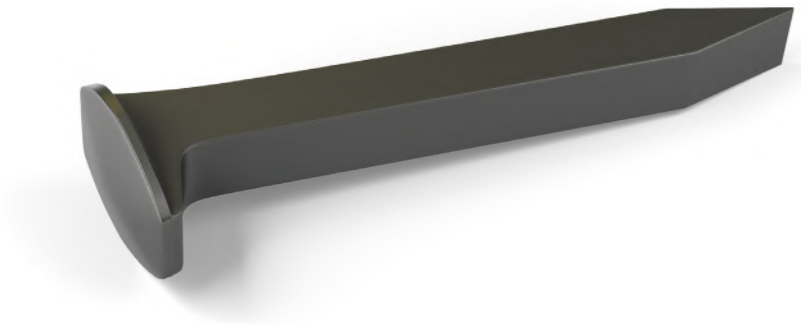

a	L	f	l	h_1	h_2	rail
10	100	18	11	28	23	S7
12	110	20	14	33	26	S10, S12, S14
14	120	25	16	38	31	S20, S18
16	150	28	18	40	36	S20,S18

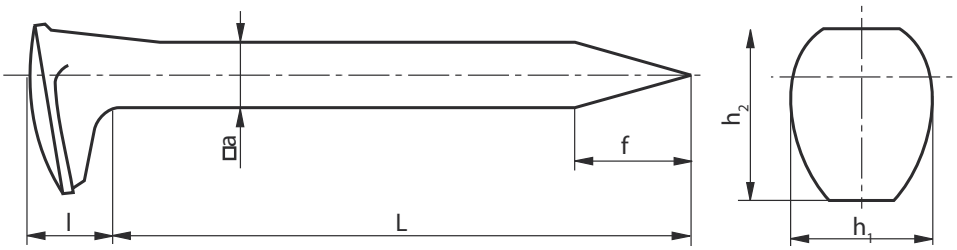

2. RAIL SPIKE
SCHIENENNAGEL

Rail spike I Schienennagel

2.1.B Rail spikes with "Dog-head" type 1
Schienennageln "Dog-head" Typ 1

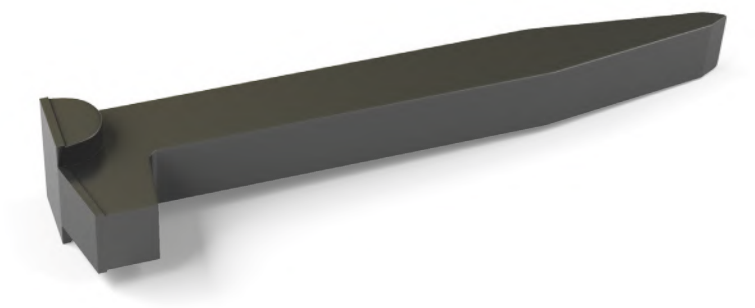

size mark	Measures and tolerances														pcs. mass (kg)
	a +1 0	l_1 ±5	b_1	b_2	c	e	f	h_1	h_2	g	l_2	l_3	R_1	R_2	
1	13	130	22	4,5	13	13	26	9	11	4	39	4	2	6,5	0,175
2	15	155	25	5	15	15	30	12	15	6	44	4	3	7,5	0,289
3	16	155	26	5	16	16	32	12	16	6	50	5	3	8	0,323

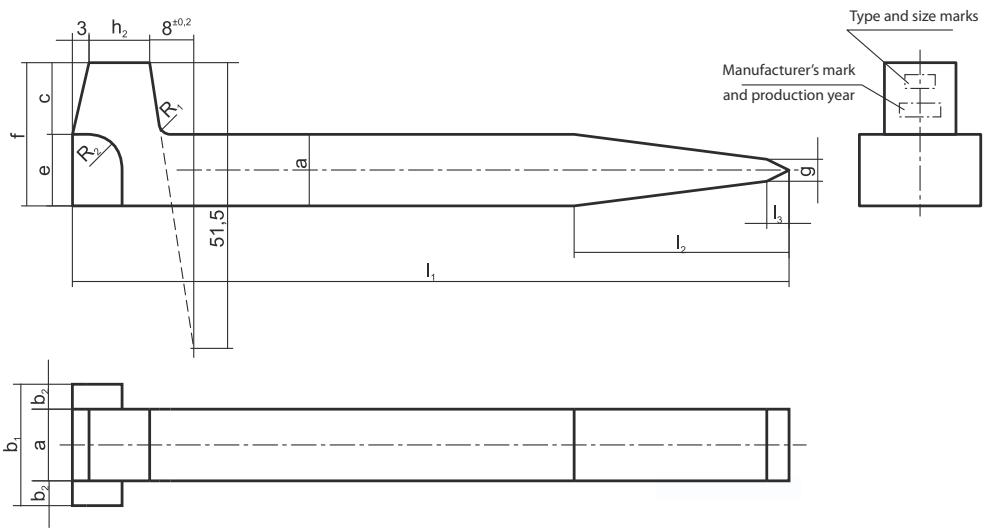

Rail spike I Schienennagel

2.1.C Rail spikes with "Dog-head" type 2

Schienennageln "Dog-head" Typ 2

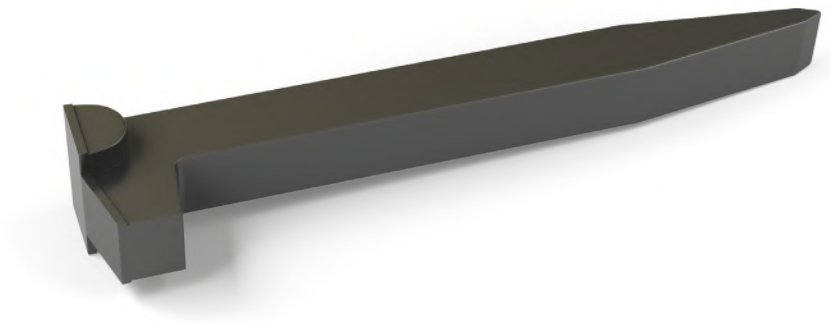

spike size mark	Measures in mm										pcs. mass (kg)	used for rails type
	a +1	b_1	b_2	c	e	f	h_1	h_2	g	l_1		
8x90	8	16	4	9	8	1,5	6	5	90	20	0,043	5
9x100	9	17	4	10	9	1,5	6	6	100	20	0,059	7
10x110	10	19	4,5	11	10	2	7	7	110	26	0,078	10
12x120	12	21	4,5	12	12	2	7	8	120	32	0,120	12,14

2. RAIL SPIKE
SCHIENENNAGEL

Rail spike I Schienennagel

2.1.D Rail spikes with "T-head"
Schienennageln "T-head"

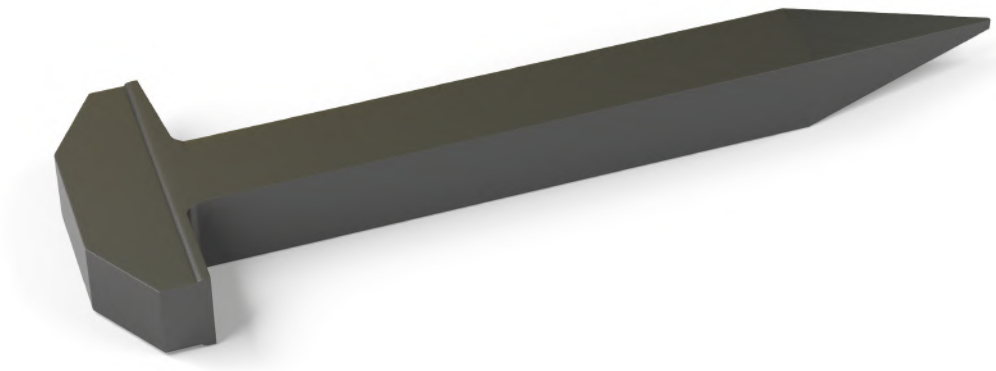

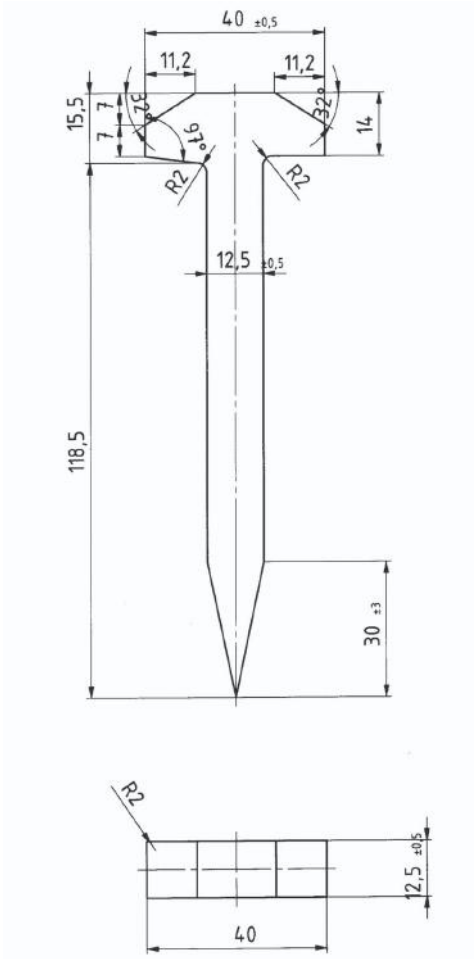

3

RAILWAY FASTENERS - MILLED PROFILES

SCHIENENBEFESTIGUNG - GEWALTZTE PROFILE

3.1 Ribbed base plates
Rippenplatten

3.2 Fishplates
Laschen

3.3 K-clamps
Klemmplatten

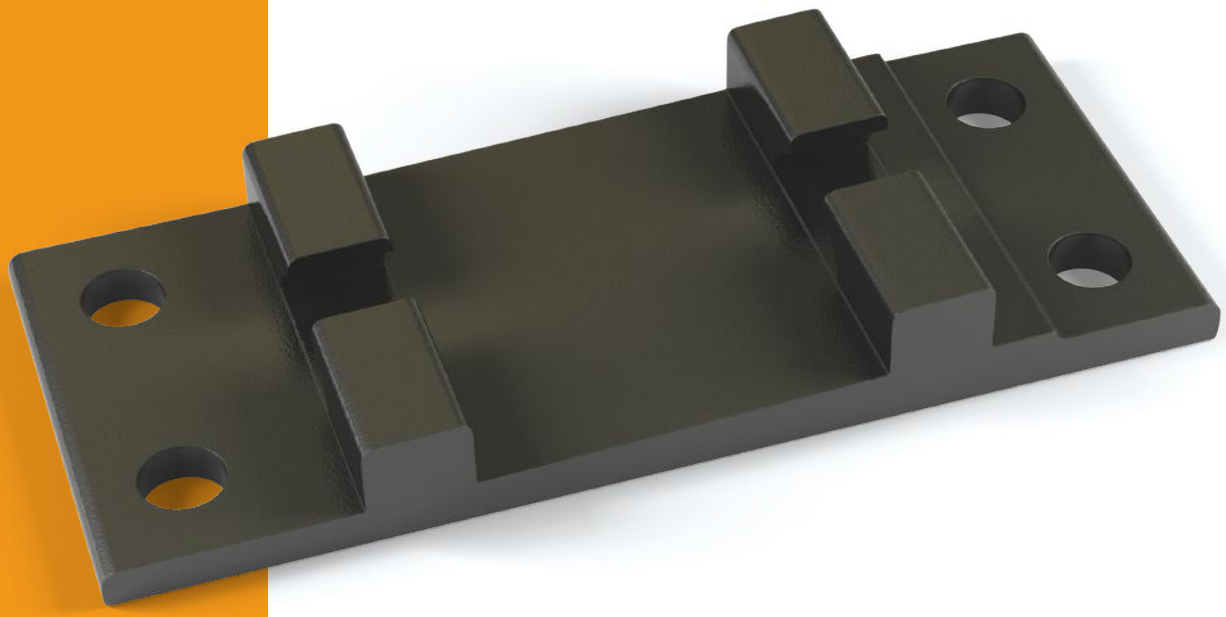

Ribbed base plates I Rippenplatten

3.1.A Base plate for rail 49E1 for wooden sleepers

Rippenplatte für Schiene 49E1 auf Holzschwellen

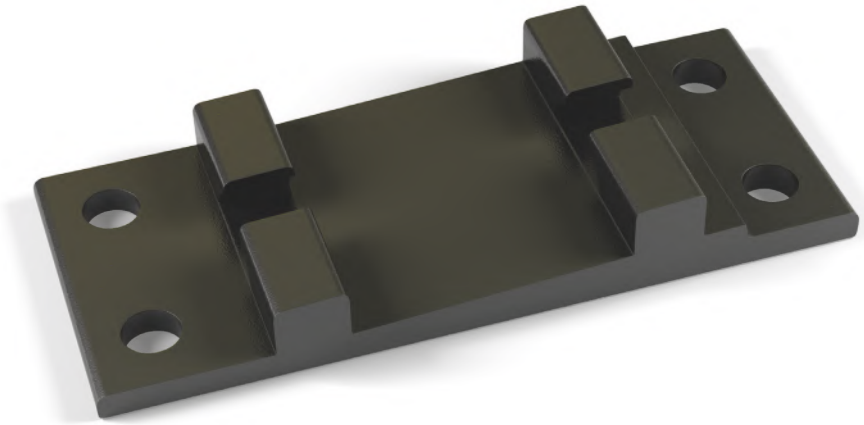

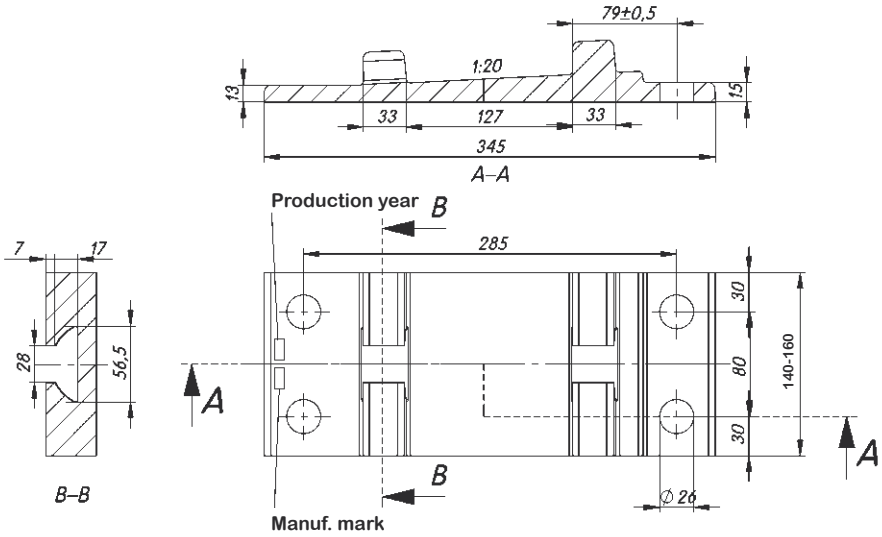

3. RAILWAY FASTENERS - MILLED PROFILES
SCHIENENBEFESTIGUNG - GEWALTZTE PROFILE

Ribbed base plates I Rippenplatten

3.1.B Base plate for rail 49E1 for concrete sleepers

Rippenplatte für Schiene 49E1 auf Betonschwellen

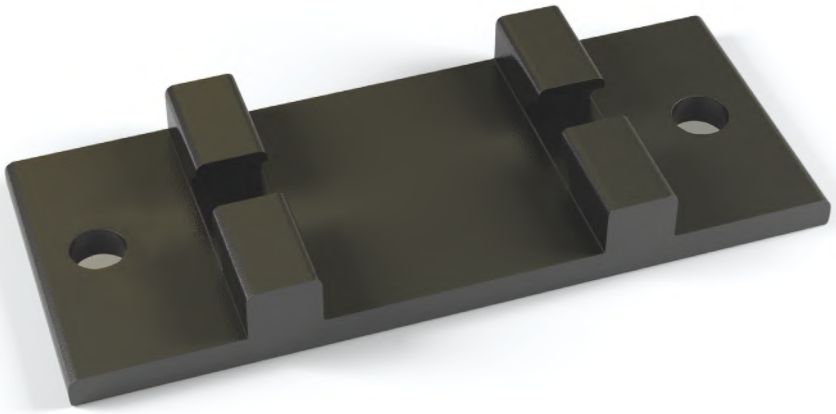

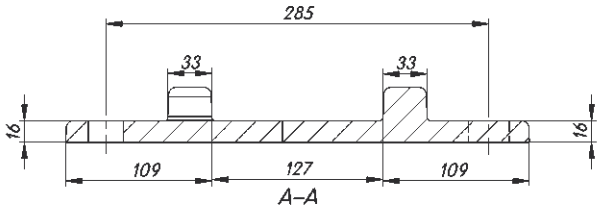

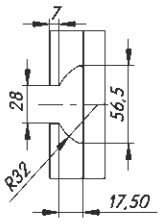

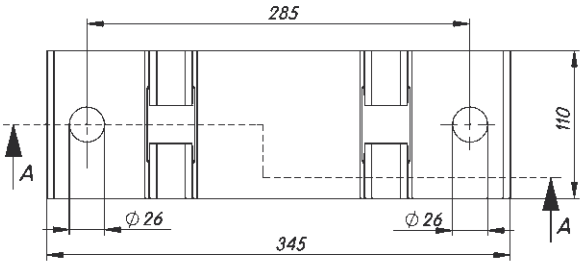

Ribbed base plates I Rippenplatten

3.1.C Base plate for rail 60E1 for wooden sleepers

Rippenplatte für Schiene 60E1 auf Holzschwellen

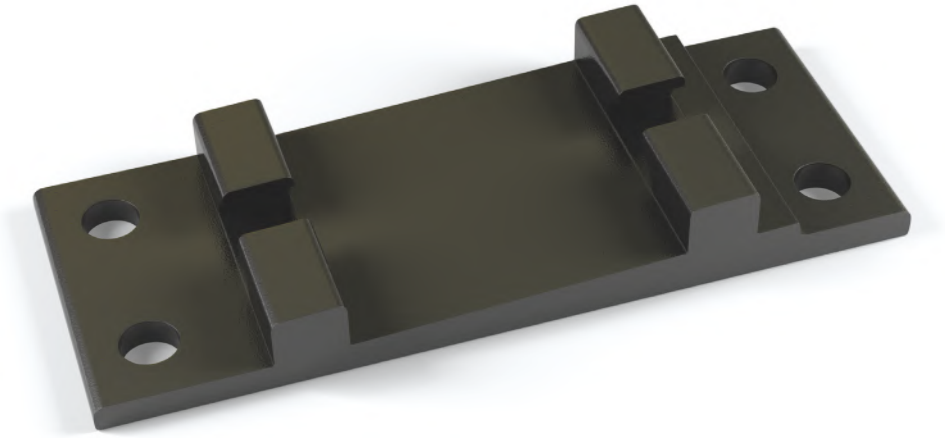

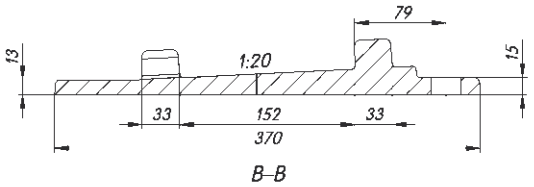

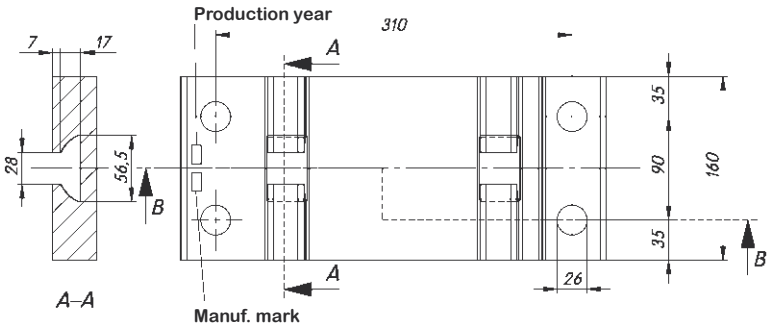

3. RAILWAY FASTENERS - MILLED PROFILES
SCHIENENBEFESTIGUNG - GEWALTZTE PROFILE

Ribbed base plates I Rippenplatten

3.1.D Base plate for rail 60E1 for concrete sleepers

Rippenplatte für Schiene 60E1 auf Betonschwellen

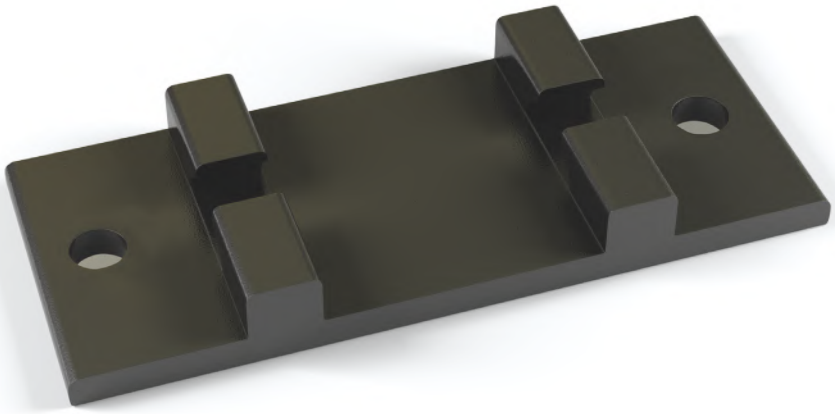

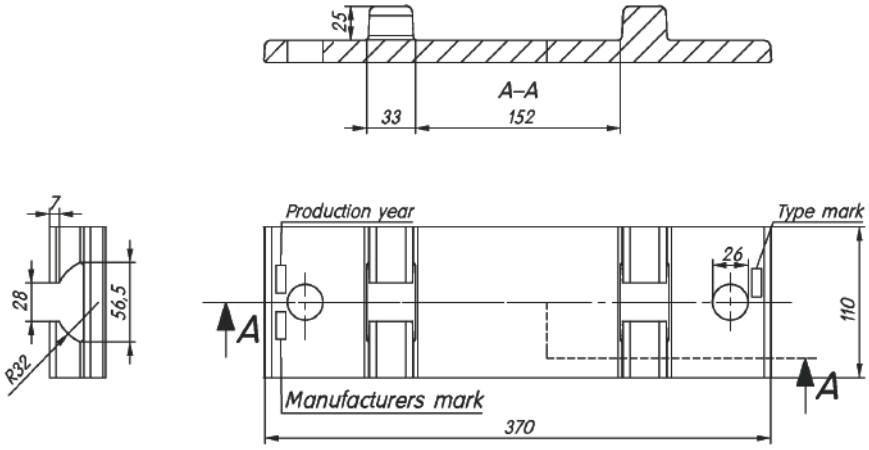

Fishplates I Laschen

3.2.A Fishplate for rail 49E1

Lasche für Schiene 49E1

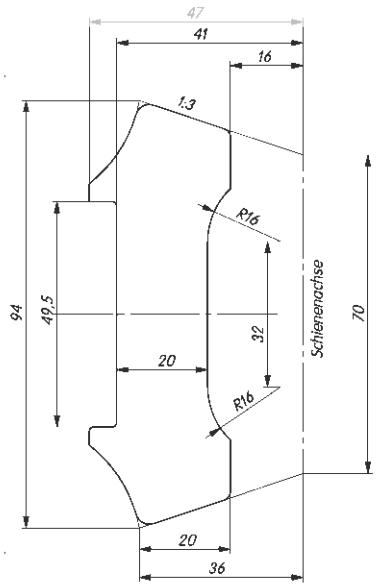

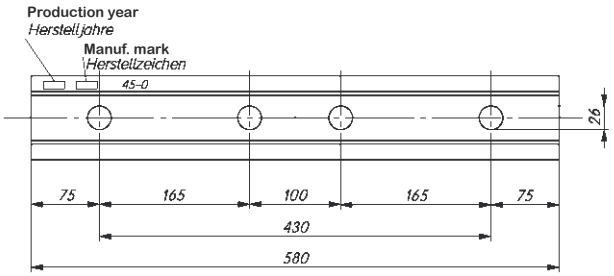

3. RAILWAY FASTENERS - MILLED PROFILES
SCHIENENBEFESTIGUNG - GEWALTZTE PROFILE

Fishplates | Laschen

3.2.B Fishplate for rail 60E1
Lasche für Schiene 60E1

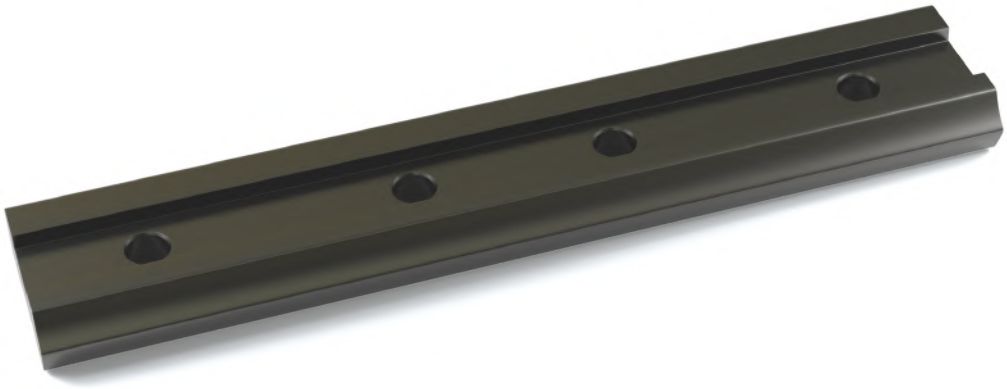

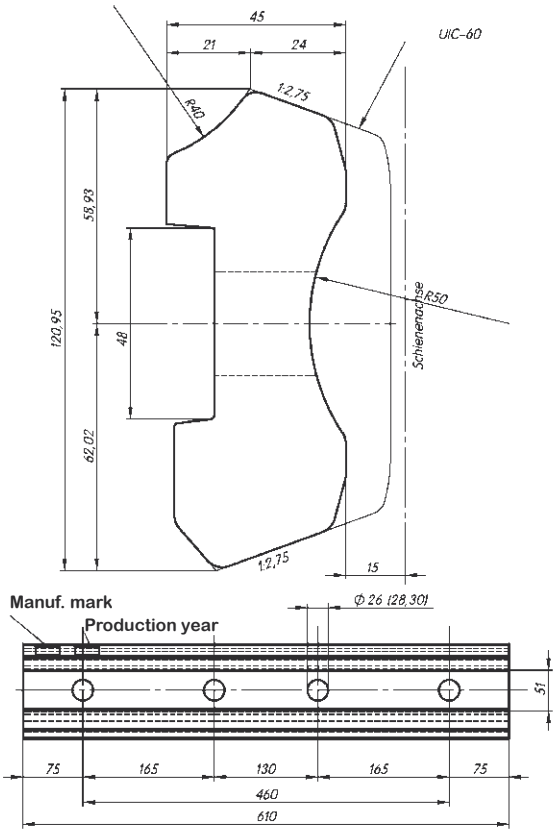

K-clamps I Klemmplatten

3.3.A Clamp plate for rail 49E1

Klemmplatte für Schiene 49E1

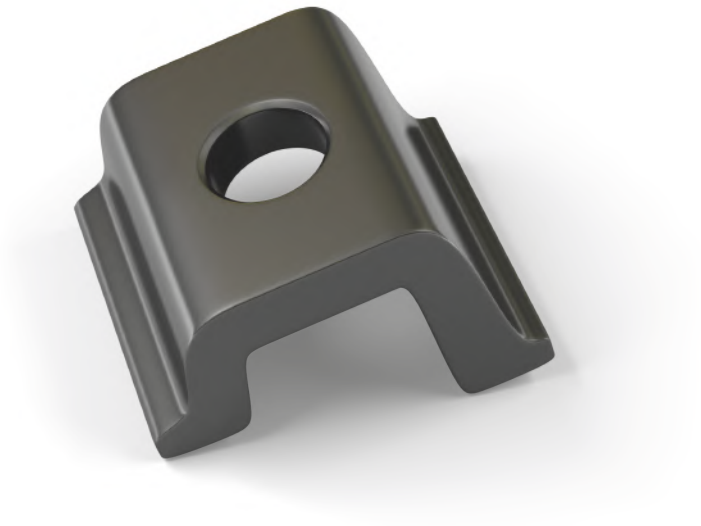

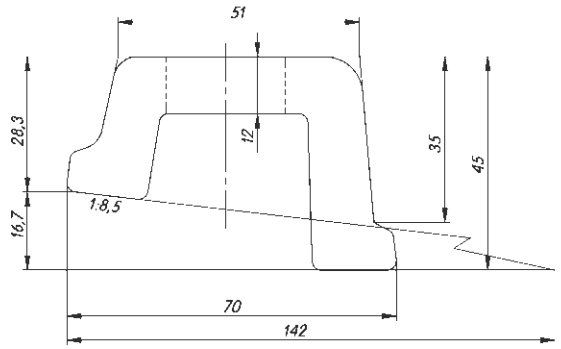

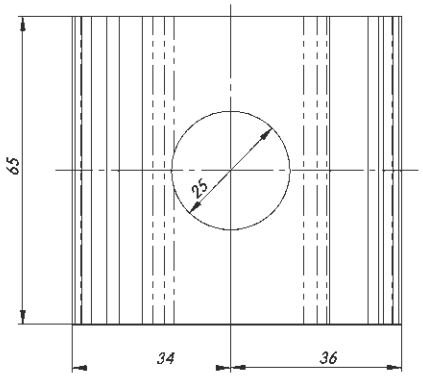

3. RAILWAY FASTENERS - MILLED PROFILES
SCHIENENBEFESTIGUNG - GEWALTZTE PROFILE

K-clamps I Klemmplatten

3.3.B Clamp plate for rail 60E1

Klemmplatte für Schiene 60E1

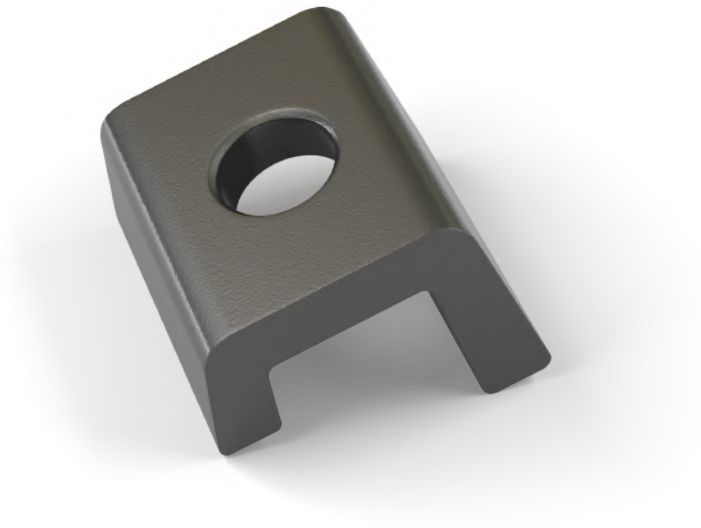

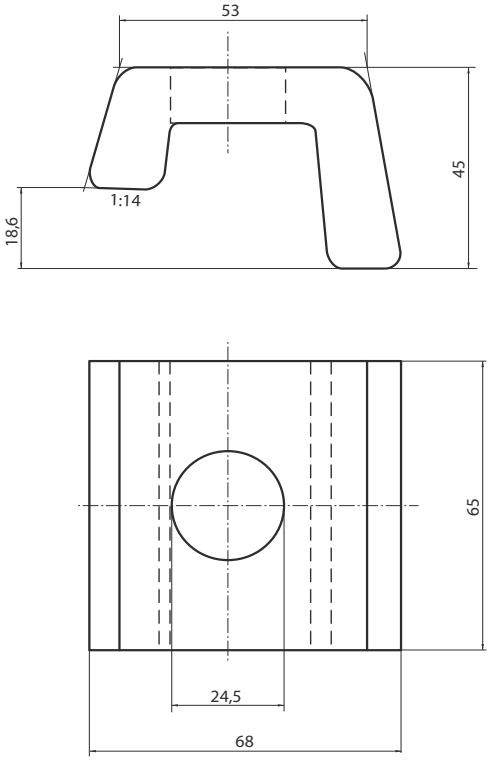

4

RAILWAY SAFETY CAPS AND ANTI SLIDE UTENSIL TYPE MATHEE

SICHERUNGSKAPPEN UND WANDERSCHUTZKLEMMEN PROFILE

4.1 Railway safety caps
Sicherungskappen

4.2 Anti slide utensil type Mathee
Wanderschutzklemme Typ Mathée

Railway safety caps I Sicherungskappen

4.1.A Rail track safety cap Sik-1a
Sicherungskappe Sik-1a

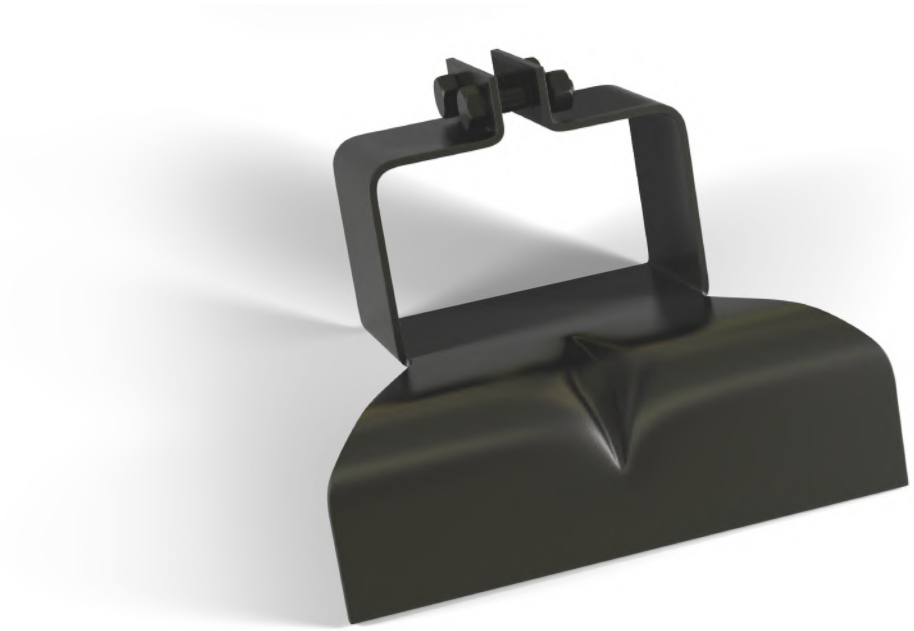

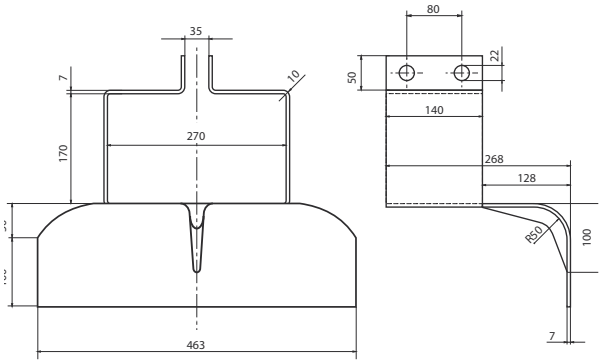

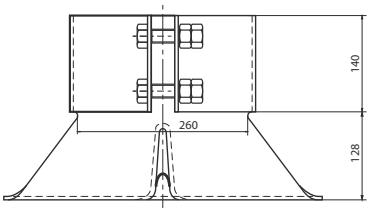

4. RAILWAY SAFETY CAPS AND ANTI SLIDE UTENSIL TYPE MATHEE
ICHERUNGSKAPPEN UND WANDERSCHUTZKLEMMEN

Railway safety caps I Sicherungskappen

4.1.B Rail track safety cap Sik-3
Sicherungskappe Sik-3

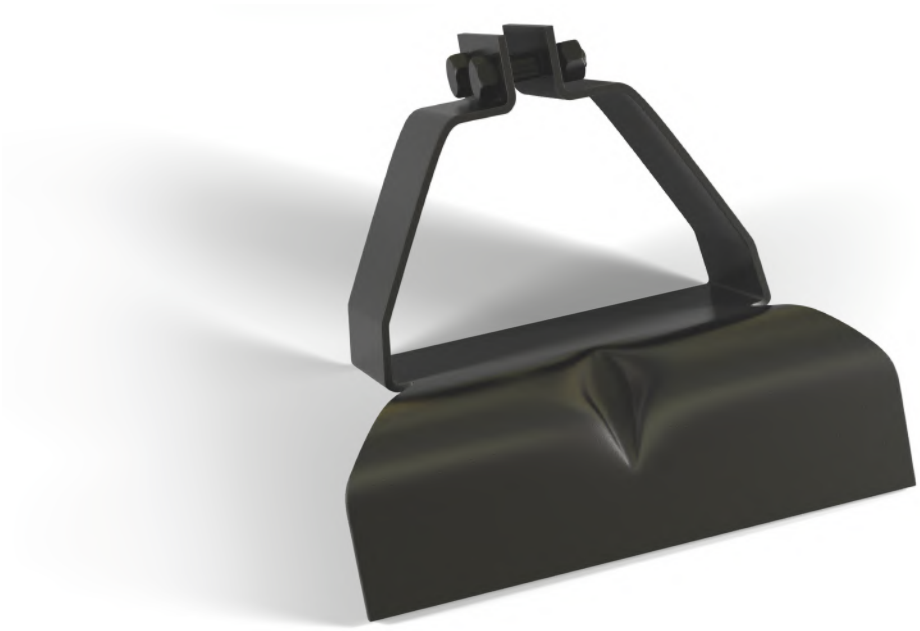

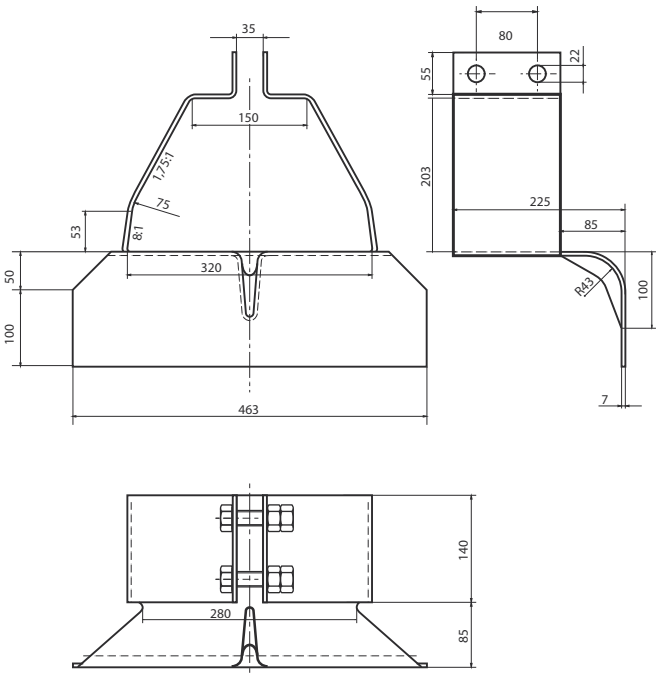

Railway safety caps I Sicherungskappen

4.1.C Rail track safety cap Sik-5
Sicherungskappe Sik-5

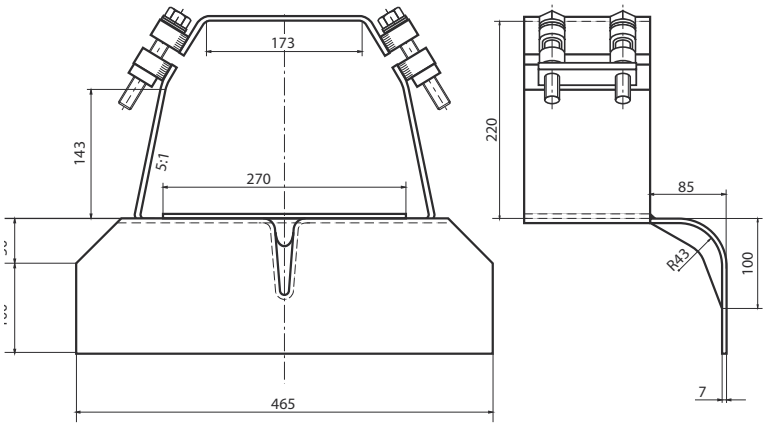

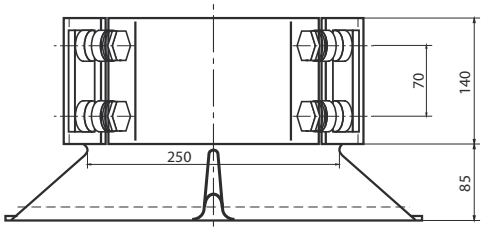

4. RAILWAY SAFETY CAPS AND ANTI SLIDE UTENSIL TYPE MATHEE
ICHERUNGSKAPPEN UND WANDERSCHUTZKLEMMEN

Railway safety caps I Sicherungskappen

4.1.D Rail track safety cap Sik-6
Sicherungskappe Sik-6

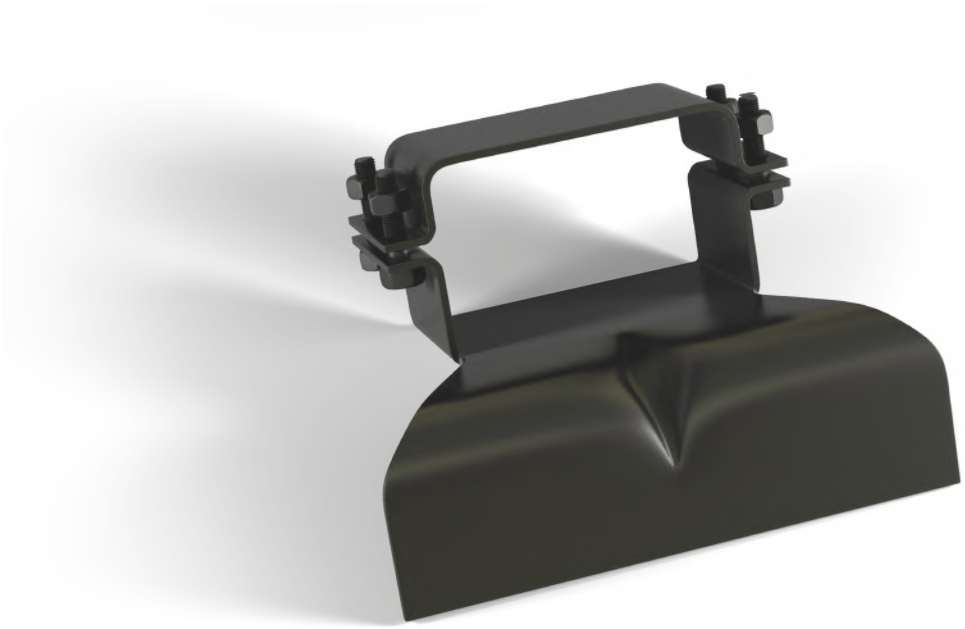

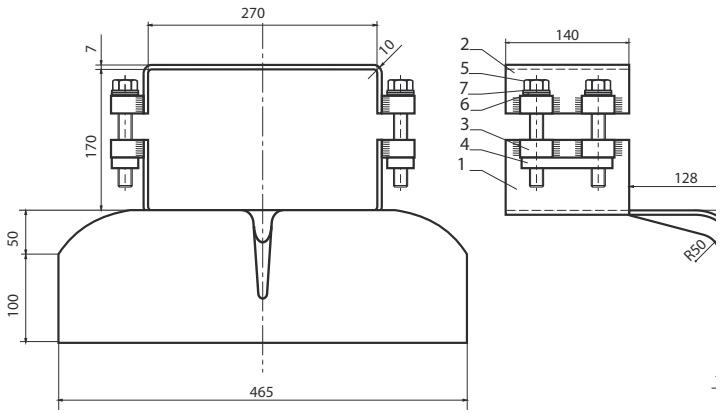

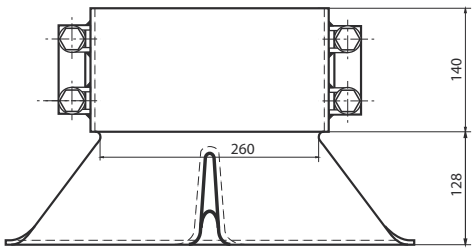

Railway safety caps I Sicherungskappen

4.1.E Rail track safety cap Sik-7
Sicherungskappe Sik-7

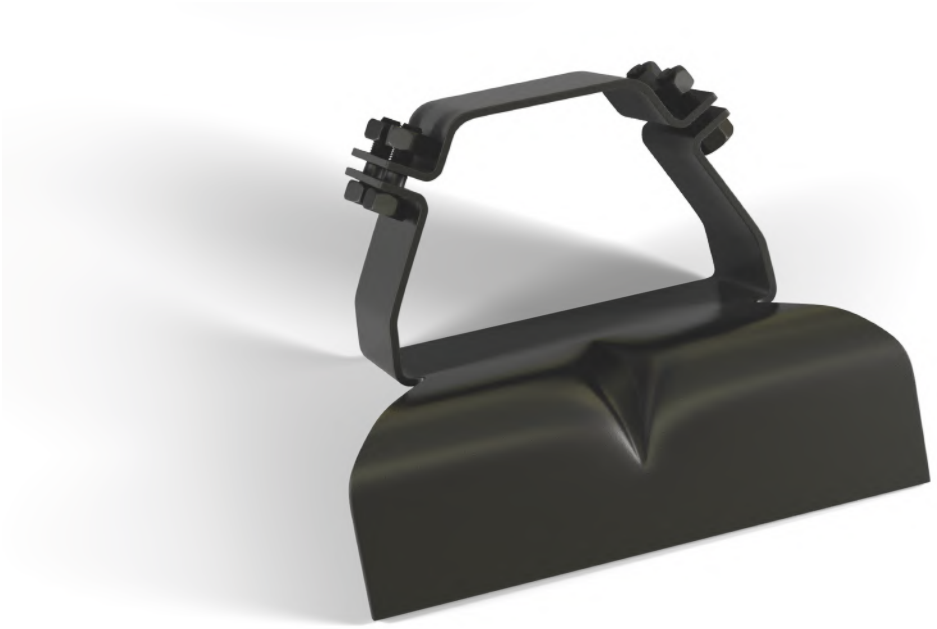

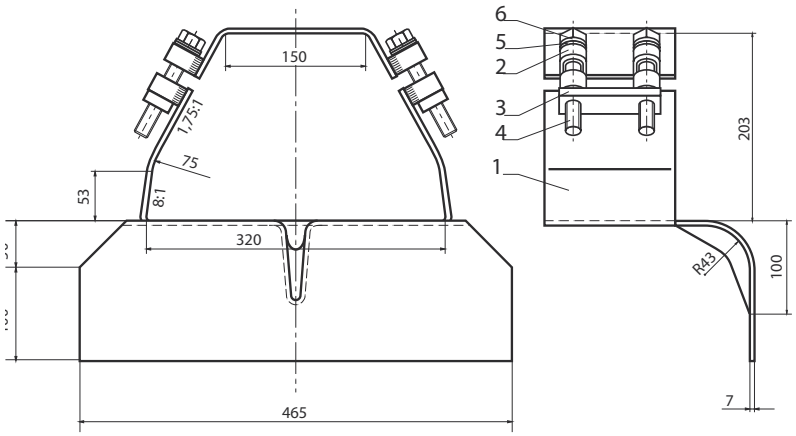

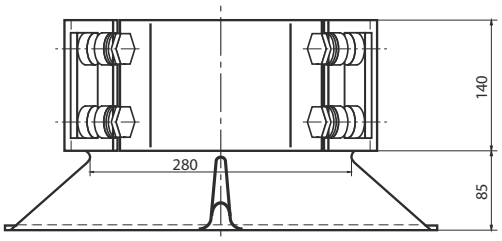

4. RAILWAY SAFETY CAPS AND ANTI SLIDE UTENSIL TYPE MATHEE
ICHERUNGSKAPPEN UND WANDERSCHUTZKLEMMEN

Railway safety caps I Sicherungskappen

4.1.F Rail track safety cap Sik-10, 20 and 30
Sicherungskappe Sik -10, 20 und 30

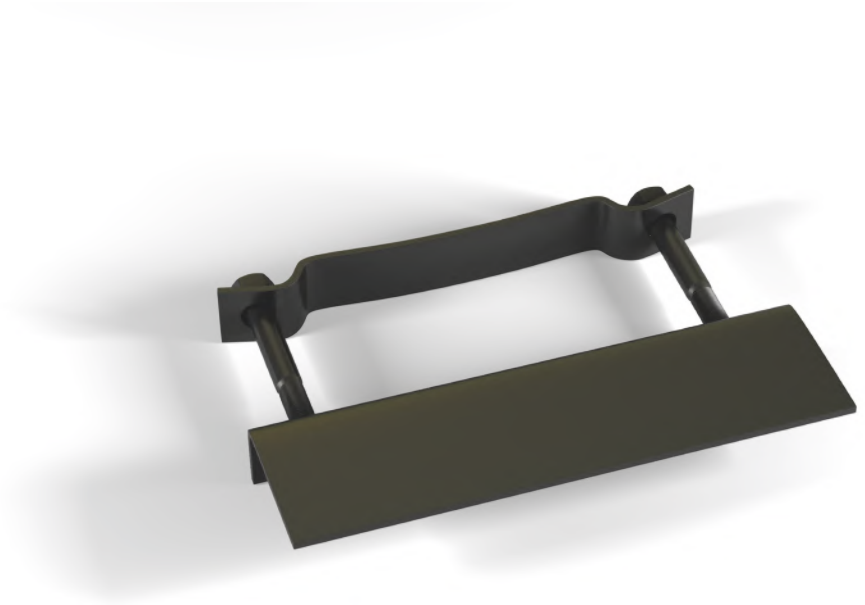

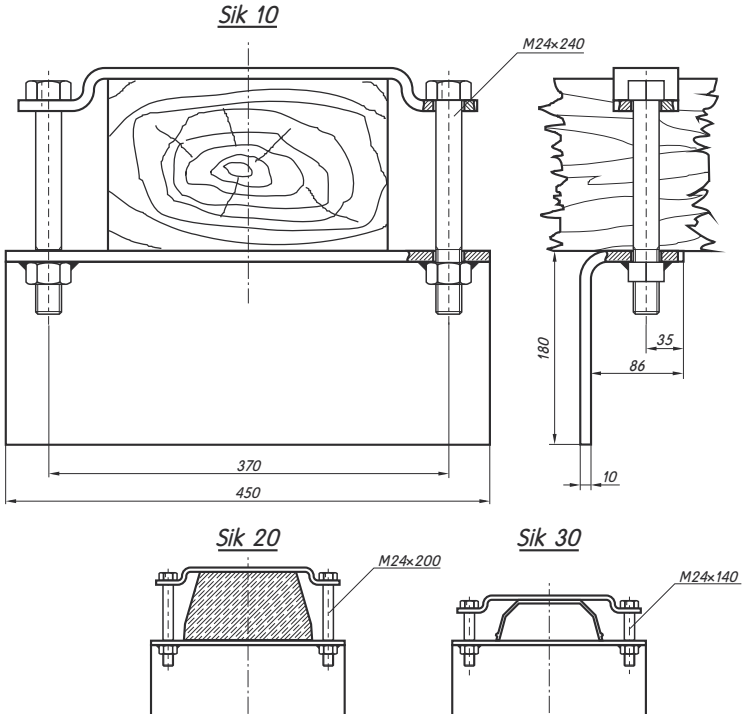

Railway safety caps I Sicherungskappen

4.1.G Rail track safety cap for wooden sleepers

Sicherungskappe für Holzschwelle

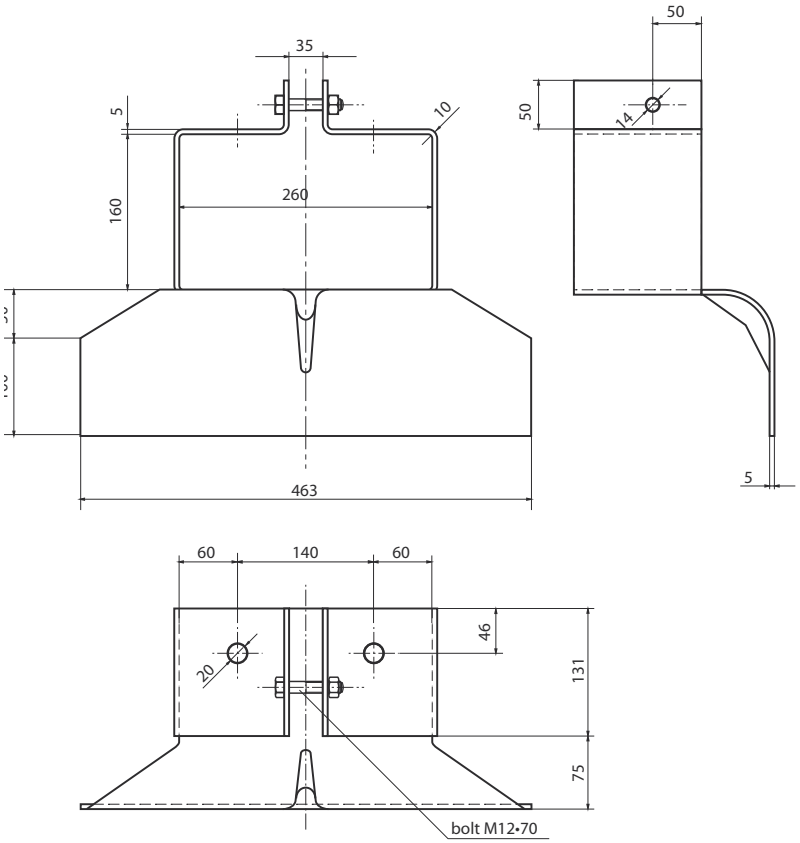

4. RAILWAY SAFETY CAPS AND ANTI SLIDE UTENSIL TYPE MATHEE
ICHERUNGSKAPPEN UND WANDERSCHUTZKLEMMEN

Railway safety caps I Sicherungskappen

4.1.H Rail track safety cap for concrete sleepers
Sicherungskappe für Betonschwellen

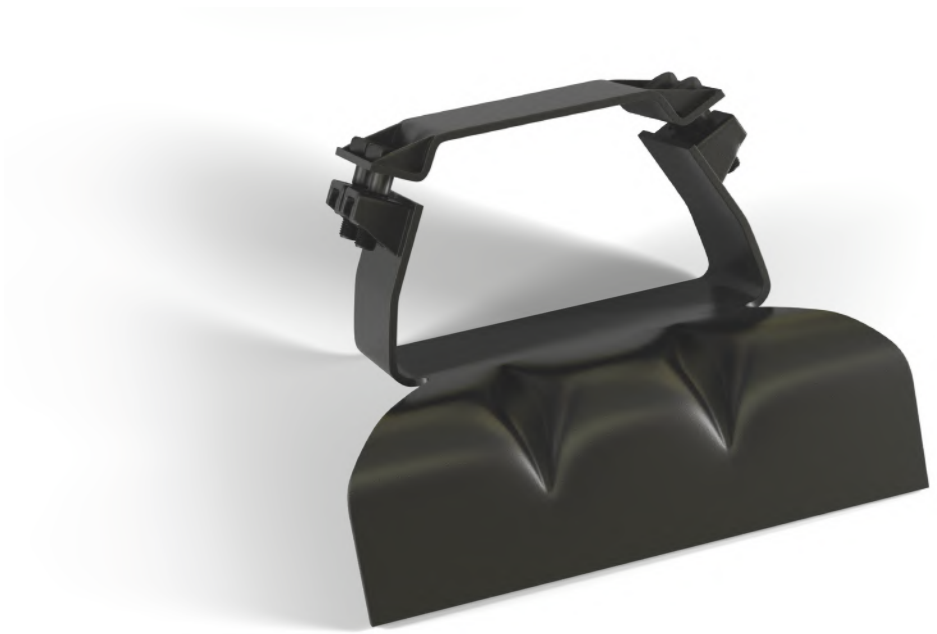

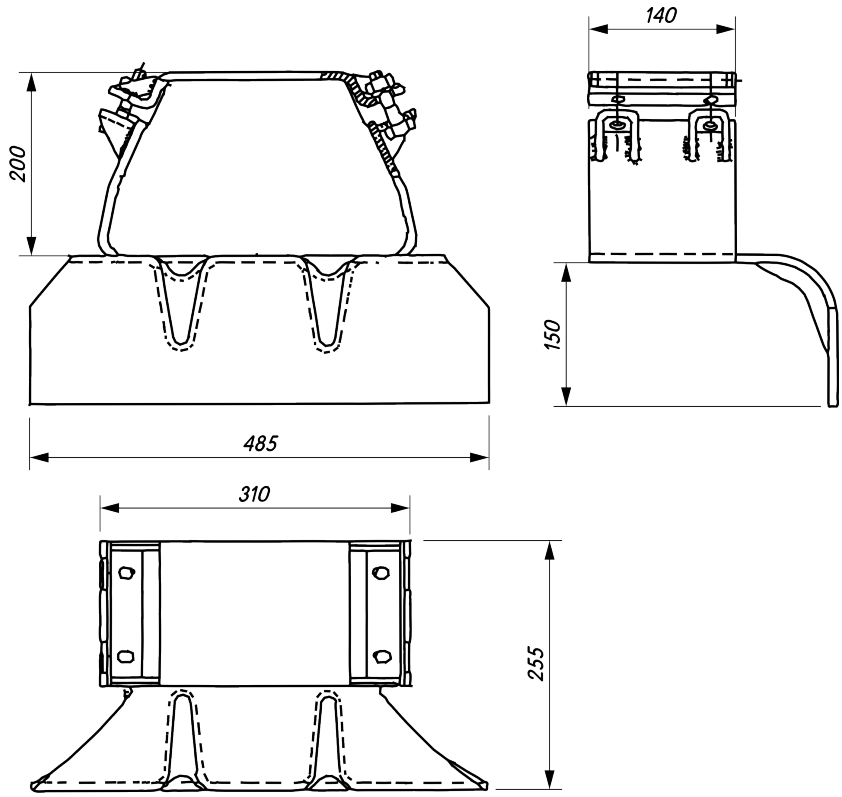

Anti slide utensil type Mathée | Wanderschutzklemme Typ Mathée

4.2.A Anti slide utensil type Mathée for rail 49E1

Wanderschutzklemme Typ Mathée für Schiene 49E1

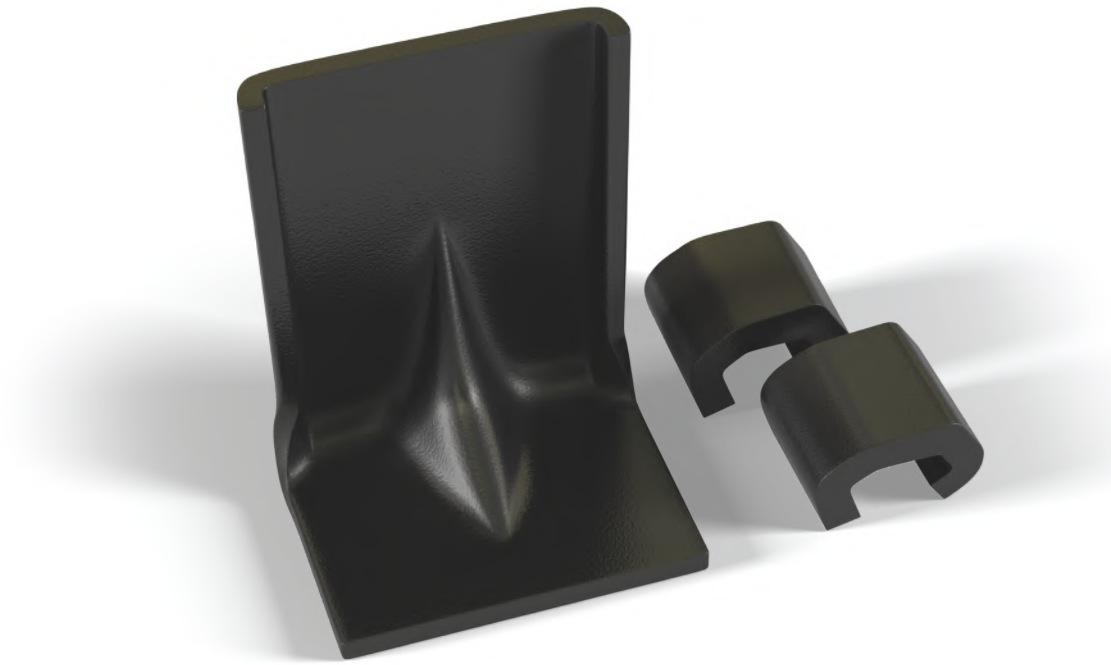

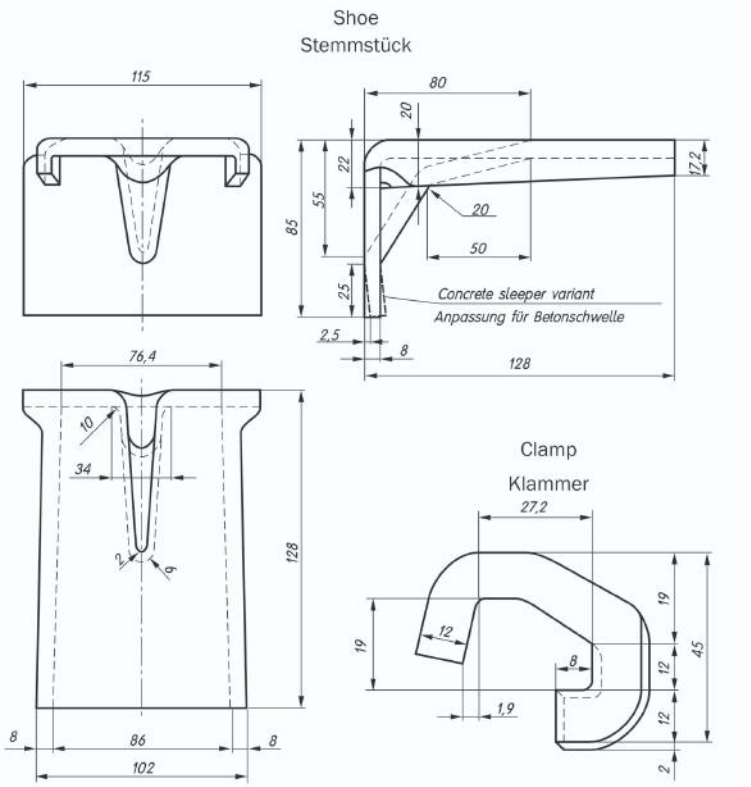

4. RAILWAY SAFETY CAPS AND ANTI SLIDE UTENSIL TYPE MATHEE
ICHERUNGSKAPPEN UND WANDERSCHUTZKLEMMEN

Anti slide utensil type Mathée I
Wanderschutzklemme Typ Mathée

4.2.B Anti slide utensil type Mathée for rail 60E1
Wanderschutzklemme Typ Mathée für Schiene 60E1

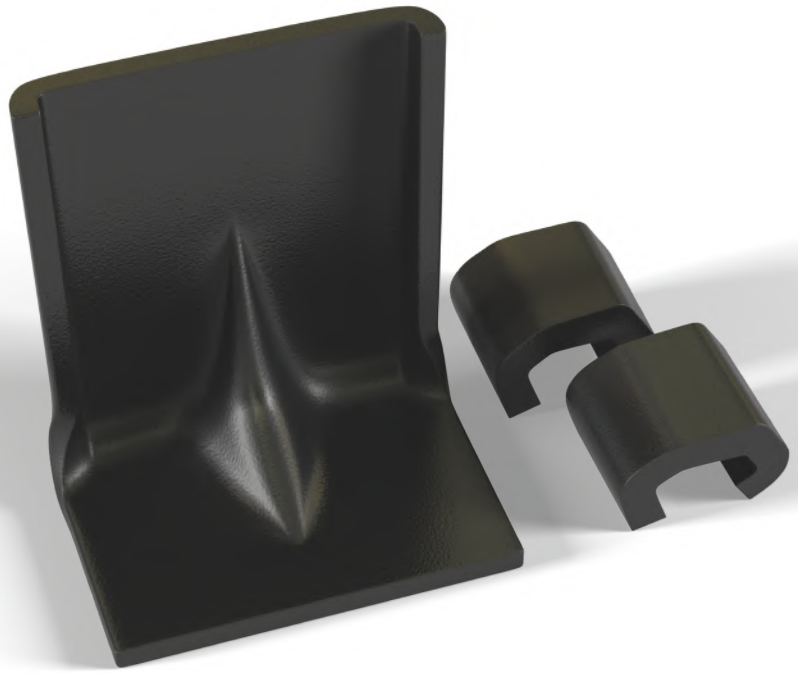

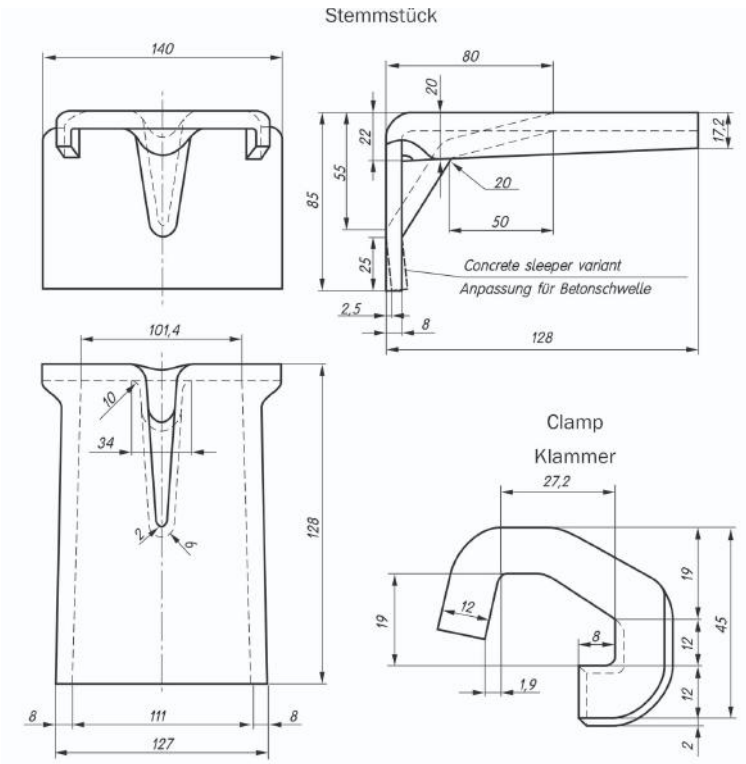

5

ELASTIC FASTENERS

ELASTISCHE SCHIENENBEFESTIGUNG

5.1 SKL1 Clamps
Spanklemme SKL1

5.2 SKL2 Clamps
Spanklemme SKL2

5.3 SKL14 Clamps
Spanklemme SKL14

5.4 SKL MD Clamps
Spanklemme SKL MD

5.5 Spring washers
Hochspannende Federringe

SKL1 Clamps I Spanklemme SKL1

5.1. Clamp SKL1
Spanklemme SKL1

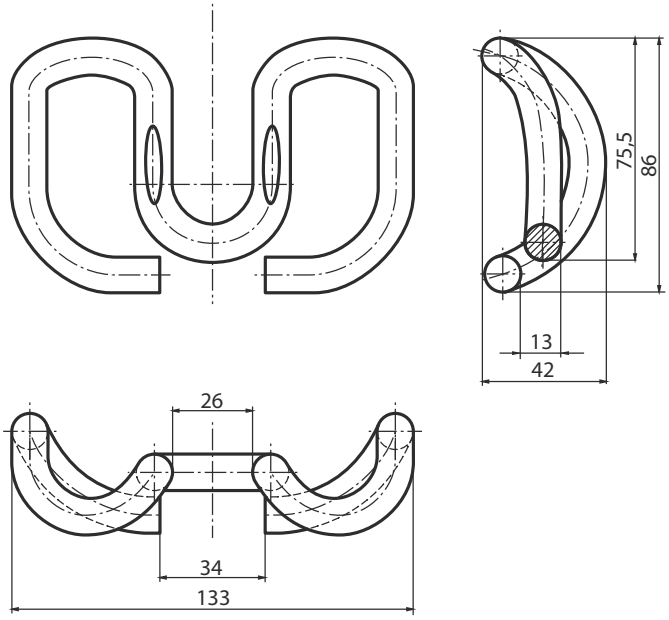

5. ELASTIC FASTENERS
ELASTISCHE SCHIENENBEFESTIGUNG

SKL2 Clamps I Spanklemme SKL2

5.2. Clamp SKL2
Spanklemme SKL2

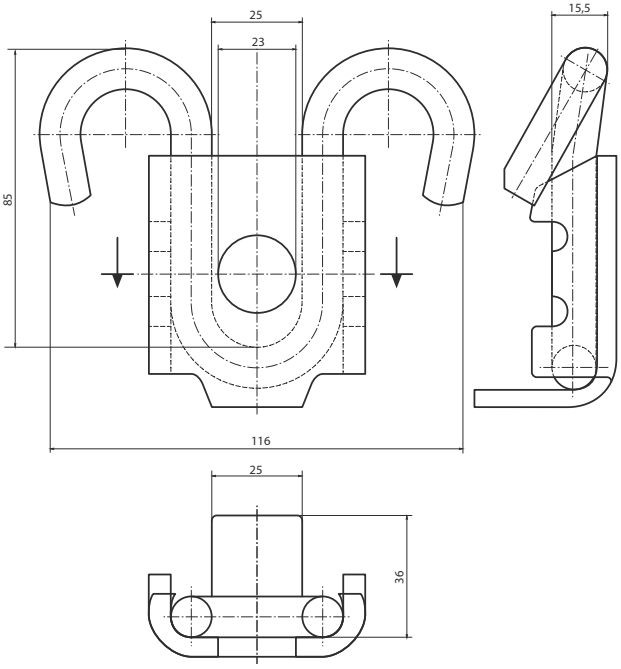

SKL MD Clamps I Spanklemme SKL MD

5.3. Clamp SKL MD
Spanklemme SKL MD

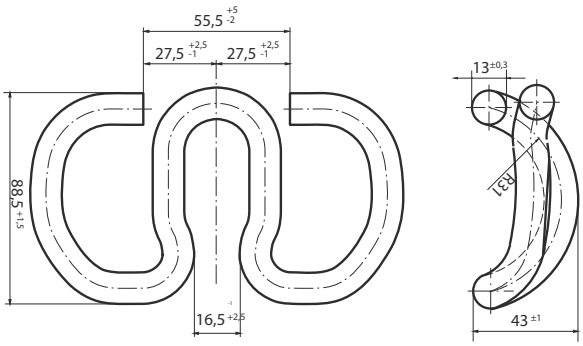

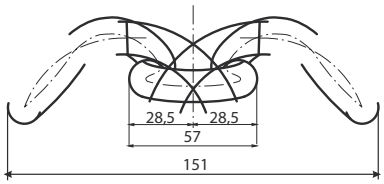

5. ELASTIC FASTENERS
ELASTISCHE SCHIENENBEFESTIGUNG

SKL14 Clamps I Spanklemme SKL14

5.4. Clamp SKL14
Spanklemme SKL14

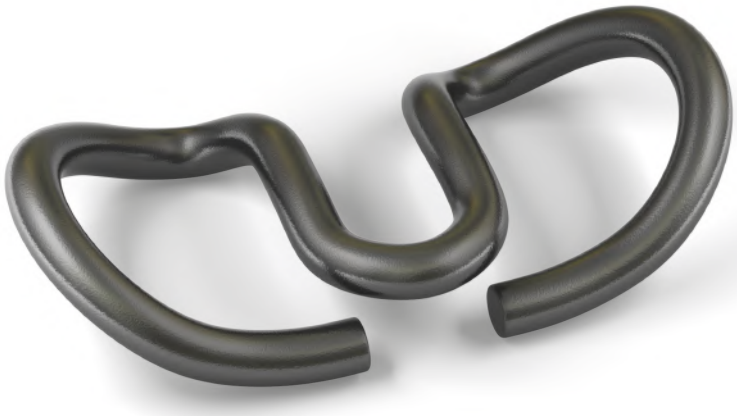

5. ELASTIC FASTENERS
ELASTISCHE SCHIENENBEFESTIGUNG

Spring washers I Hochspannende Federringe

5.5. Spring washers
Hochspannende Federringe

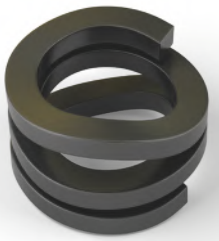

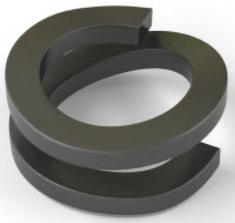

mark	d	D	h	a	b	mass kg/pcs.
Fe 7 single	25	45	19,5	6	10	0,050
Fe 6 double	25	45	22,0	6	10	0,090
Fe 8 double	21	39	18,5	5	9	0,058
Fe 15 double	28	52	23,0	6	12	0,126
Fe 19 triple	26	46	31,0	6	10	0,145

TSI certificate for concrete sleepers
DB - HPQ certificate

6

SLEEPERS
SCHWELLEN

6.1 Concrete sleeper B-70
Betonschwelle B-70

6.2 Steel sleeper

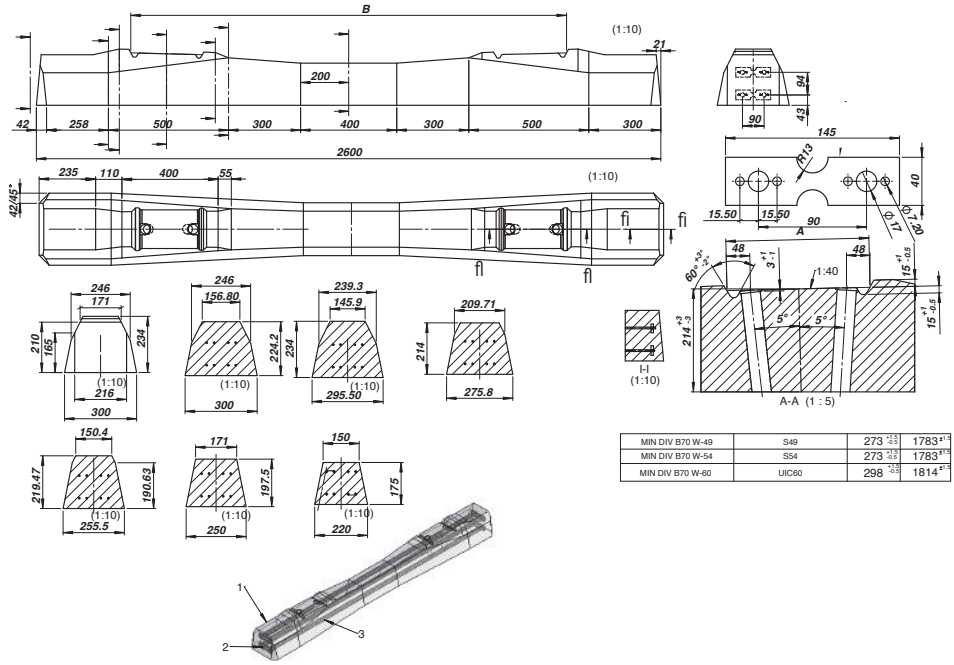

MIN DIV B70 W-49	S49	273	1783
MIN DIV B70 W-54	S54	273	1783
MIN DIV B70 W-60	UIC60	298	1814

MIN DIV SVRLJIG AD
DUŠANA TRIVUNCA 31
RS-18360 SVRLJIG

T: +381 18 822 345, +381 18 41 55 100
F: +381 18 821 270
mindivsvrljig@divgroup.eu
www.divgroup.eu

DIV CONCRETE SLEEPERS LTD.
DUŠANA TRIVUNCA 31
RS-18360 SVRLJIG

T: +381 18 41 55 100, +381 18 822 345
F: +381 18 821 270
dcs@divgroup.eu
www.divgroup.eu

DIV LTD.
BOBOVICA 10A
HR-10430 SAMOBOR

T: +385 1 3377 000
F: +385 1 3375 155
div@divgroup.eu
www.divgroup.eu